Timken® 454-Series™ Wheel Bearings for Commercial Vehicles

TIMKEN
Where You Turn

Bearings for dual tires and wide single tires

- Specially designed to handle the 2" outset loads
- Allows consistency within fleets
- Provides flexibility of wheel arrangements

Compatible with industry standard components

- Use with popular axle and hub designs
- Can retrofit into existing equipment

Designed to improve bearing life

- Highly engineered internal raceway profiles for optimal stress distribution
- Proprietary enhanced surface finishes

At Timken, we recognize the need of commercial vehicle customers to conserve fuel, carry greater loads, standardize components and maximize uptime. These are the driving factors behind the new Timken 454-Series™ bearings. The 454-Series bearings are geared towards helping your fleet operate more efficiently and cost effectively.

With over 100 years of delivering excellence to the heavy-truck industry, Timken's 454-Series continues the legacy by delivering tomorrow's high-performance wheel-end technology today.

For additional information, contact your Timken sales representative or our dedicated team of automotive and heavy-duty customer service representatives at: phone (866) 9-TIMKEN (984-6536), or fax (877) TIMKEN-9 (846-5369).

Effect of Wheel Outset

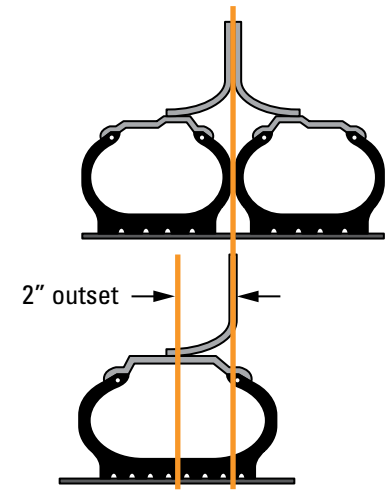

These wheel images represent the shift in load line location from a standard dual tire to a 2" outset wide single tire.

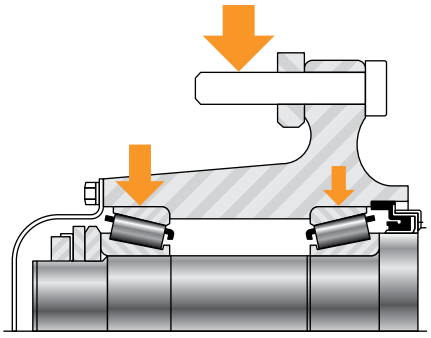

This wheel-end cross section represents the increased loading present on the outer bearing, when using a wide single tire.

Application	Manual Adjusted			Pre-Adjusted			
	Cone	Cup	MileMate® Set	Cone	Cup	MileMate® Set	Kit**
R Drive Inner	NP454594	NP454592	SET443*	NP454946	NP454298	SET600*	RDTC2
R Drive Outer	NP454580	NP454572	SET442*	NP454302	NP454874	SET601*	
N Trailer Inner	NP454248	NP454210	SET441*	NP454350	NP454727	SET602*	TNTC2
N Trailer Outer	NP454049	NP454011	SET440*	NP454357	NP454773	SET603*	
P Trailer Inner & Outer	NP454445	NP454410	SET444*	NP454964	NP454561	SET604*	TPTC2

* Includes proprietary Timken part numbers
** Each kit includes two MileMate® Sets and a spacer.

Note: A wheel bearing is one component of a wheel-end system. Consult your other wheel-end suppliers (i.e., axle, hub and wheel) for the rating of their products.

Factors that can affect tapered roller bearing life

Uniform Internal Geometry

Industry bearing standards set only I.D., O.D., overall bearing width and cup angle of a tapered roller bearing. The angle of contact for cones and rollers varies by brand. Timken internal geometry is uniform and consistent regardless of the plant in which our bearings are manufactured, helping to ensure a perfect match every time. Tight manufacturing tolerances on the cup, cone and rollers help to optimize bearing life.

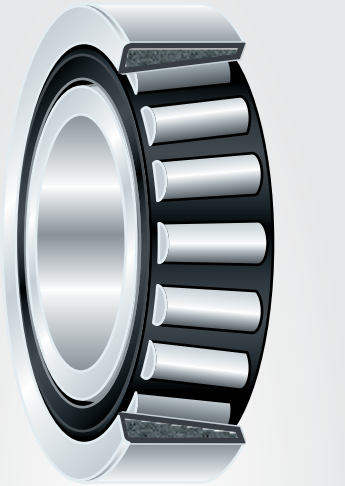

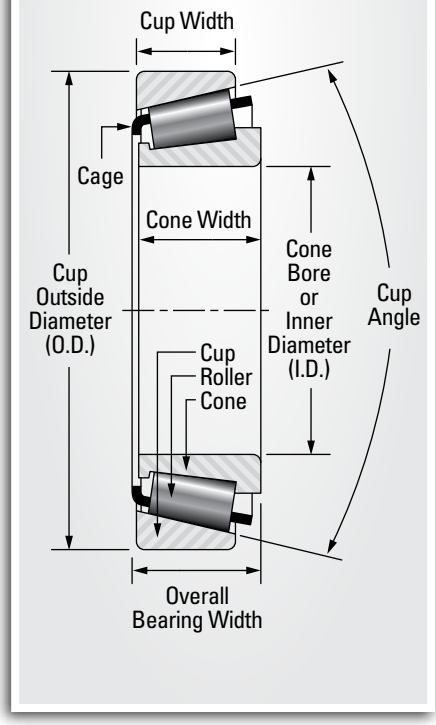

Enhanced Surface Finishes

We employ advanced finishing processes, which result in more consistent, smoother surface finishes on our bearing races and rollers. Smoother surface finishes mean less friction and greater efficiency.

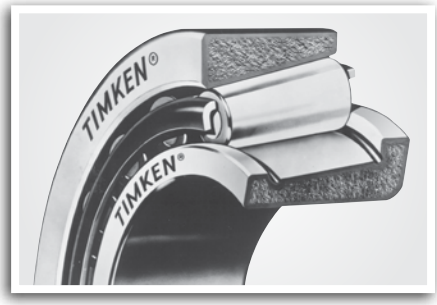

Special Profiles

Special profiles reduce stress on Timken bearing races and rollers by providing even distribution of loads across contact surfaces, increasing load-carrying capacity.

Steel Quality

Timken provides customers around the world with high-quality steel. Capitalizing on the synergy between our bearing and steel businesses, we use our expertise to select bearing materials that meet the most demanding application requirements and help extend bearing life.

Timken – The Right Choice

Timken technology offers uniform internal geometry, enhanced surface finishes, special profiles and quality steel to help fleets maximize bearing life.

Can your fleet afford downtime associated with lower bearing life?

TIMKEN
Where You Turn

www.timken.com

Timken® is a registered trademark of The Timken Company

© 2009 The Timken Company
Printed in U.S.A.
0.2M 12-09-29